10. PUBLIC HEARING NAT TURNER TRAIL

OPENING STATEMENT

This public hearing is held pursuant to § 15.2-2204, Code of Virginia, 1950, as amended to receive public comment on a proposed resolution requesting the Commonwealth Transportation Board of Virginia to establish a transportation enhancement project (MAP-21 Transportation Alternatives Program) to develop the next phase of the Nat Turner Trail. The project seeks to acquire up to $240,000 in federal enhancement funds which, if acquired, must be matched with other local funding sources (Southampton County Historical Society) of at least $60,000. Among other things, project funding for this phase of the project may be used to construct ADA compliant sidewalks leading from the Rebecca Vaughan House to 17 additional sites located in the Town of Courtland. The new sidewalks will facilitate pedestrians moving between 6 museums, the public library and the Southampton County Courthouse complex as well as the 17 interpreted Nat Turner Rebellion sites. Funds may also be used to develop and construct parking facilities at the Rebecca Vaughan House.

Included in your agenda packages are a number of exhibits to give you some perspective of the project. There is an aerial photo illustrating the walking trail in Courtland, complete with planned sign locations and the proposed text for each sign. There is also an exhibit illustrating the sign layout and specifications.

The notice of public hearing was published in the Tidewater News on October 13 and October 20, 2013 as required by law. After conclusion of the public hearing, the Board of Supervisors will consider the comments offered this evening and will proceed to adopt, reject or defer action on the proposed resolution.

We have with us tonight, Mr. John V. Quarstein, a consultant to the Southampton County Historical Society who has been working on this project and will provide a brief overview of the proposed grant application.

BOARD OF SUPERVISORS
SOUTHAMPTON COUNTY, VIRGINIA

RESOLUTION 1012-10

At a regular meeting of the Board of Supervisors of Southampton County, Virginia, held in the Southampton County Office Center, Board of Supervisors' Meeting Room, 26022 Administration Center Drive, Courtland, Virginia on Monday, October 28, 2013 at 6:00 p.m.

PRESENT
The Honorable Dallas O. Jones, Chairman
The Honorable Ronald M. West, Vice Chairman
The Honorable Alan W. Edwards
The Honorable Carl J. Faison
The Honorable S. Bruce Phillips
The Honorable Barry T. Porter
The Honorable Glenn H. Updike

IN RE: Transportation Enhancement Program

Motion by Supervisor _____:

WHEREAS, in accordance with Commonwealth Transportation Board construction allocation procedures, it is necessary that a request by resolution be received from the sponsoring local government or state/federal agency in order that the Virginia Department of Transportation establish an enhancement project in Southampton County.

NOW, THEREFORE, BE IT RESOLVED by the Board of Supervisors of Southampton County, Virginia that it requests the Commonwealth Transportation Board to establish a project to aid in the interpretation of the Nat Turner Trail Project (UPC 97817); and

BE IT FURTHER RESOLVED that the County of Southampton hereby agrees to provide a minimum 20 percent of the total cost for planning and design, right of way, and construction of this project; and

BE IT FURTHER RESOLVED that the County of Southampton hereby agrees to enter into an agreement with the Virginia Department of Transportation to provide oversight that ensures the project is developed in accordance with all state and federal requirements for design, right of

way acquisition, and construction of a federally funded transportation project; and

BE IT FURTHER RESOLVED that the County of Southampton will be responsible for maintenance, upkeep and operating costs of any facility constructed with Enhancement Program funds; and

BE IT FURTHER RESOLVED that if the County of Southampton subsequently elects to cancel this project the County of Southampton hereby agrees to reimburse the Virginia Department of Transportation for the total amount of costs expended by the Department through the date the Department is notified of such cancellation. The County of Southampton also agrees to repay any funds previously reimbursed that are later deemed ineligible by the Federal Highway Administration.

IN TESTIMONY WHEREOF we have caused the Seal of the Southampton County Board of Supervisors to be hereunto affixed.

Seconded by Supervisor _____.

VOTING ON THE ITEM: YES –

NO –

A COPY TESTE:

_____
Michael W. Johnson, County Administrator/
Clerk, Southampton County Board of Supervisors

NAT TURNER TRAIL
PROJECT BUDGET - PHASE 2
October 2013

Task by Project Development Phase	Project Costs	MAP-21	Local Match
PRELIMINARY ENGINEERING PHASE			
Engineering/Design Fees	UPC 97817	$ -	$ -
Environmental Document	UPC 97817	$ -	$ -
Surveying	UPC 97817	$ -	$ -
VDOT Review Charges	UPC 97817	$ -	$ -
Grant Administrative Costs	$ 3,850.00	$ 3,080.00	$ 770.00
PE Phase TOTAL COSTS	$ 3,850.00	$ 3,080.00	$ 770.00
RIGHT OF WAY PHASE			
Right of Way Purchase	$ 7,500.00	$ 6,000.00	$ 1,500.00
RW Phase TOTAL COSTS	$ 7,500.00	$ 6,000.00	$ 1,500.00
CONSTRUCTION PHASE			
Sidewalk Improvements	$ 196,500.00	$ 157,200.00	$ 39,300.00
Contingency	19,650.00	15,720.00	3,930.00
Construction Management	10,000.00	8,000.00	2,000.00
Inspection	6,000.00	4,800.00	1,200.00
Construction VDOT oversight charges	6,500.00	5,200.00	1,300.00
CN Phase TOTAL COSTS	$ 238,650.00	$ 190,920.00	$ 47,730.00
TOTAL COSTS (PE, RW,& CN)	**$ 250,000.00**	**$ 200,000.00**	**$ 50,000.00**

Draft

PRELIMINARY ESTIMATE

TIP No. **N/A** County: **Southampton, VA**
Route
Location **Town of Courtland**
District **Hampton Roads District (#5)**
Typical Section

CONSTR.COST
$ 217,000

Prepared By: Eric W. Bowman, EI - WSP 9/23/2013
Checked By: B. Dehler, PE 9/24/13

Line Item	Item Code	Spec No.	Description	Quantity	Unit	Price	Amount
	100	513	Mobilization	1	LS	$ 17,900.00	$ 17,900.00
	110	301	Clearing & Grubbing	0.50	Acres	$ 10,000.00	$ 5,000.00
	120	303	Regular Excavation	430	CY	$ 20.00	$ 8,600.00
	10628	515	Flexible Pave. Planing, 0"-2"	140	SY	$ 6.00	$ 840.00
	14100	ATTD	Removal of Sidewalk	540	SY	$ 26.00	$ 14,040.00
	14120	ATTD	Removal of Comb. Curb and Gutter	110	LF	$ 20.00	$ 2,200.00
	15311	ATTD	Removal of Pavement Material	960	SY	$ 26.00	$ 24,960.00
	41828	510	Adjust Exist. Manhole Frame & Cover	2	EA	$ 400.00	$ 800.00
	85020	510	Adjust Drop Inlet	1	EA	$ 400.00	$ 400.00
			Pavement Items				
	10635	315	Asphalt Concrete, TY. SM-9.5A (2")	20	Ton	$ 120.00	$ 2,400.00
	10635	315	Asphalt Concrete, TY. SM-9.5A (1")	30	Ton	$ 120.00	$ 3,600.00
	10610	315	Asphalt Concrete, TY. IM-19.0A (2")	70	Ton	$ 95.00	$ 6,650.00
	10642	315	Asphalt Concrete, Ty. BM-25.0A (4")	130	Ton	$ 92.00	$ 11,960.00
	10100	308-309	Untreated Aggregate Base Matl. NO. 21B, 6"	30	Ton	$ 30.00	$ 900.00
	12600	502	STD. Comb. 6" Curb & Gutter, CG-6	290	LF	$ 26.00	$ 7,540.00
	12800	502	STD. Gutter, CG-8	180	SY	$ 70.00	$ 12,600.00
	12920	502	Entrance Gutter, CG-9B	2	SY	$ 60.00	$ 120.00
	13220	504	Hydr. Cement Conc. Sidewalk, 4"	340	SY	$ 52.00	$ 17,680.00
	13222	504	Hydr. Cement Conc. Sidewalk, 7"	200	SY	$ 115.00	$ 23,000.00
	13108	ATTD	Detectable Warning Surface, CG-12	10	SY	$ 250.00	$ 2,500.00
	11040	316	Concrete Entrance Pave., 7"	360	SY	$ 60.00	$ 21,600.00
	54032	704	Pavement Markings, (TY. B, Class I, & 4" (white))	550	LF	$ 2.00	$ 1,100.00
			Traffic Control	1	LS	$ 10,000.00	$ 10,000.00
							$ -

	Contract Cost……	$ 196,390.00
Amounts from VDOT 2012 Bid Averages	**E. & C. (10%)……**	$ 19,700.00
Bids are from various Districts	**Construction Cost……**	**$ 216,090.00**

Courtland
15
16
8
9, 10, 11, 13, 14
7
6
5
1, 2, 3, 4, 12
© 2013 Google
Google earth

Heritage Village
Sign 1
Rebecca Vaughan House
Sign 2
Sign 3
Sign 4
Sign 12
Museum of
Southampton History
Linden St
Google earth

Rebecca Vaughan House
1
2
3
4
12
Google earth

Southampton Courthouse
Sign 7
Rochelle Prince House
Seven Gables
Sign 6
Sign 5
Courtland Methodist
Main St
St. Luke's Episcopal
Google earth

St. Luke's Episcopal
5
Google earth

Seven Gables
6
Google earth

Rochelle Prince House
7
Google earth

Southampton Courthouse
Sheriff's Office/Jail
Sign 13
Sign 14
Sign 11
Sign 9
Sign 10
Sign 7
Sign 8
Mahone's Tavern
Google earth

Mahone's Tavern
8
© 2013 Google
© 2013 Google
Google earth

13
11
14
10
9
Google earth

Sign 15
Sign 16
1530
Google earth

15
Google earth

16
STOP
© 2013 Google
Google earth

Sign #1 Rev 4-4-13

Rebecca Vaughan House – The High Point of the Rebellion

You are here in Courtland, the county seat of Southampton County, Virginia, at the new location of the Rebecca Vaughan House. This building was relocated here from its original location, five miles away at the end of a long lane off of Barrow Road. The last of the landowners killed during the 1831 Insurrection were at this house. Today, it is the only remaining structure where whites died during the rebellion.

What Happened Here

Nat Turner and his men reached the Rebecca Vaughan House about noon on August 22, 1831. Widow Vaughan heard riders approaching, thinking they were her son George and a group of fox hunters. Unfortunately, George had already been killed by the insurrectionists. As they rode up to the house they killed Vaughan's son Arthur and the farm's overseer. Rebecca was inside with her 18-year-old niece, Anne Eliza Vaughan, who was here to plan her wedding. Hearing voices outside, Anne Eliza came downstairs. She was immediately killed, her body thrown outside. Rebecca asked to go upstairs to pray before meeting her maker. The insurgents agreed; but, she prayed too long and they killed her on her knees. Blood stains tarnished the floor for the next 70 years.

Nat Turner sat on his horse, staring at the victims while his followers demanded food and brandy from an elderly slave in the kitchen. They "damned the brandy as vile stuff," and then marched on toward Jerusalem, today's Courtland.

Sidebar: <u>Description of Nat Turner</u>

Nat Turner was 31 years old at the time of the rebellion. Southampton County lawyer William Parker described him as being "5 feet six or eight inches high – weighs between 150 & 160 - rather bright complexion but not a mulatto – broad-shouldered- large flat nose- large eyes…hair on the top of his head very thin- no beard except on the upper lip and the tip of his chin…" -- *Library of Virginia, Archives Branch, Executive Communications Box 38*

Images:

Vaughan House Drewry UVA

Nat Turner sketch – "unknown" from Treagle -- JM scanned

R Vaughan house from History of SH Co. Book, pg 27 -- JM scan

Need to commission or buy image of "insurrectionists"

Sign #2 Rev 4-5-13

SLAVERY'S ROOTS IN VIRGINIA – DEFINING AFRICAN SLAVERY STATUS

The first documented Africans to arrive in Virginia landed at Old Point Comfort in August 1619. From Angola, they were captured from a Portuguese slave ship near Vera Cruz, Mexico, by two Dutch privateers, the *Treasurer* and *White Lion*. The legal status of these 20 Africans is uncertain. England had no laws concerning slavery when the Virginia colony was established. Nevertheless, these Africans came under duress as captives from a slave ship and were traded by the privateers for supplies. They immediately suffered various forms of prejudice and discrimination including racism, work status, and language barriers. These circumstances and the need for an inexpensive labor force eventually resulted in the codification of slavery.

Status Defined: 1619-1654

The majority of the first Africans arriving in Virginia were treated as "servants for life." The lack of a written contract for servitude differentiated the legal status between European and African servants. Laws segregating the races were also established. On September 17, 1630, an act prohibiting the interbreeding and intermarriage between the races was passed. Not all Africans arriving during this era were kept as servants. Anthony (Antonio) Johnson gained his release from servitude in 1623. He moved to Northampton County, Virginia, where he prospered. By 1651, Johnson owned land and held five servants. When one of his African servants, John Castor (Casar, Casor), attempted to gain his release, Johnson sued and in 1654 Castor was judged to be Anthony Johnson's "servant for life."

Slave Codes

Johnson's court case is the first documented enslavement of an African servant. It was followed by the 1661 Act of the General Assembly that made the legal status of the mother determine whether or not a child was free or slave. More acts followed detailing slave conditions and the limitations placed on those held in bondage. The intensive labor requirements of cash crop agriculture prompted the need for a secure work force and the slave trade prospered. In 1650 there were approximately 300 of African descent in Virginia (one per cent of the total population); however, by 1782, this number was 48% (270,762 out of the total 567,614).

Images:

Howard Pyle ship (LOC)

OPC map inset (VHS)

Cotton fields (LOC)

US Slave Trade 1830 (LOC)

Sign #3 REV 3/29/13

SLAVE REVOLTS -- RISING UP FOR FREEDOM

The 1831 Southampton Insurrection is considered the most consequential slave revolt in North American history. It was, however, preceded by many others. Slave owners lived in fear of such uprisings as enslaved people of African descent often outnumbered white citizens in rural and urban areas throughout the South.

The Plant Cutter Revolt, 1663

This first known conspiracy took place in Gloucester County, Virginia. Dissatisfied with their heavy work load, living conditions and unfair treatment, white indentured servants and black slaves planned a revolt. They were, however, betrayed.

The Stono Rebellion, 1739

Armed slaves from South Carolina began marching to Florida to secure their freedom. More than 20 whites and 40 blacks were killed before the revolt was suppressed. It was the largest uprising in Colonial America.

New York Revolts, 1712 & 1741

A fire on April 6, 1712, incited the first New York City slave revolt. Thirteen whites were casualties and 21 enslaved Africans were executed. More than 70 blacks were arrested.

Again in 1741, a series of 13 fires erupted and one damaged Fort George. Two slaves were arrested. Before they were burned at the stake, they confessed to being part of a much larger plot. Eventually, 152 blacks and 20 whites were arrested, and many were deported. The ringleaders, the slave Casor and a white tavern keeper, were executed; their corpses were left to rot in public.

Gabriel's Rebellion, 1800

Gabriel Prosser, a slave and literate blacksmith, planned a slave invasion of Richmond, Virginia. On August 30, 1800, severe weather delayed the insurrection. Subsequently, Prosser was betrayed and he and 35 of his co-conspirators were executed.

It is noted that Prosser's inspiration was Toussaint L'Ouverture, the valiant leader of the successful 1791 overthrow of the French colonial regime in Saint-Domingue (Haiti).

Quote in box: "It is important to acknowledge that history favorably regards Gabriel's cause while consigning legions who sought to keep him and others in chains to be forgotten. " – *From Virginia Governor Tim Kaine's informal pardon of Prosser, August 30, 2007*

More Notable Pre-1831 Revolts

German Coast Rebellion, January 8-10, 1811 - This uprising near New Orleans, Louisiana, was suppressed by the U.S. Army. Two plantation owners and 82 slaves died.

George Boxley Rebellion, March 6, 1815 - White abolitionist George Boxley of Fredericksburg, Virginia, strove to incite slaves to rebel. He was imprisoned; yet, he later escaped to Indiana where he was involved in the Underground Railroad.

Denmark Vesey Revolt, July 14, 1822 - Vesey, a free black, plotted to capture Charleston, South Carolina. He was supported by over 1,000 slaves and free blacks; but, his plan was revealed. Vesey and 35 others were executed.

Images

Gabriel Prosser (wiki)

Toussaint L'Ouverture (wiki)

Saint Domingue revolt (wiki)

Sign #4 REV 4-2-13

CONDITIONS OF SLAVERY -- A “PECULIAR INSTITUTION”

By 1800 slavery was primarily practiced in the South (the state of New York did not outlaw slavery until 1834) where it was the key labor force enabling the expansion of cotton, rice, sugar, and tobacco cash crop agriculture. Slaves were found everywhere -- on small farms and larger plantations, in cities and towns, in industry and transportation. Enslaved people of African descent worked in rural areas planting, harvesting and clearing land, repairing buildings and other agricultural duties. In cities, slaves worked as domestics, carpenters, factory workers and in other trades.

Treatment of Slaves

How slaves were treated varied by master - some very cruel and some rather benevolent- as well as by the nature of their work situation. Slavery was based on the fact that those in bondage were chattel property due to their race. Their status was often reinforced by violence—actual or threatened. Slave codes limited slave movement, literacy, and legal rights. Masters and overseers enforced discipline as they pleased; punishments included whipping, mutilation and sale.

The living conditions of slaves depended on the individual owner. Most slave diets were insufficient for their heavy work load. The poor clothing, sanitation, and housing conditions prompted sickness. Slave women lived in threat of sexual exploitation, having no recourse but to succumb to the desires of their masters. One of the most tragic aspects of slavery was the sale of slaves, separating families and long-term relationships. These conditions fostered powerful resentment.

Retaliation

Those who were enslaved resisted their servitude by slowing their work pace, damaging equipment, stealing food and livestock, learning to read, faking illness or running away. The ultimate resistance was for slaves, such as Nat Turner, to rise up against the slave system and kill their masters in an effort to secure freedom.

Images:

Slave auction Harper’s Weekly LOC) – crop out top with rebel flag

Bibb’s whipping (UNC)

Page’s grist mill (UNC)

Slave family /cabin (LOC)

Sign #5 REV 4/4/13

ST.LUKE'S EPISCOPAL CHURCH -- MILITIA MUSTER SITE

The local militia mustered here at St. Luke's Episcopal Church on August 22, 1831, when the news of Nat Turner's uprising spread throughout the county.

Governor John Floyd

Governor John Floyd was a War of 1812 veteran and also held a commission as a militia brigadier general. He ordered six companies of armed militia, artillery and cavalry units, from Richmond and Petersburg to Southampton County to put down the rebellion. Simultaneously, Floyd mobilized militia regiments in Southampton and Sussex Counties. North Carolina also sent troops. The militia was under the overall command of Brigadier General Richard Eppes.

Military Response

When the mayor of Norfolk learned of the insurrection, he mustered the city's militia and sent an urgent plea for Federal assistance. U.S. Army and Navy forces were rushed to Southampton to help quell the rebellion. By the time they arrived, the rebellion was over. Even though the governor wished to rely on the militia and not Federal forces to stop the insurrection, the rapid response indicated that the long-held fear of a slave revolt had become a reality. Every available resource was utilized to defeat Nat Turner and his followers.

Federal Help from Hampton Roads

When the U.S. Army and Navy commands in Virginia heard of the uprising they reacted immediately. Fort Monroe's commander, Colonel James House, sent Lieutenant Colonel William J. Worth with three companies of men. Commodore Lewis Warrington, commandant of the Gosport Navy Yard in Portsmouth, dispatched sailors and marines from the USS *Natchez* and *Warren,* led by Commodore Stephen Elliot. The steamer *Hampton* transported these forces to Smithfield where they marched on to Southampton County. They returned to Hampton Roads after serving six days.

Images

Gov John Floyd LOC b/w

Col. Wm Worth – Wikki

Inset view of militia from Horrid Scene (LOC)

Fayetteville Guard uniformed soldier (CMH)

Sign #6 Rev 4/4/13

SEVEN GABLES -- HOME OF THOMAS RUFFIN GRAY

The elegant residence you see here is known as Seven Gables. Located in Courland, Virginia, this home was constructed by Sam Kello in 1799, who was then serving as Southampton County's Clerk of the Court. At the time of the 1831 Insurrection, attorney Thomas Ruffin Gray owned this house.

GRAY'S TIME WITH NAT TURNER

From a prominent Southampton County family, Gray had practiced law in Jerusalem (today's Courtland) since 1829. During the hearings following the Southampton Insurrection, Thomas Gray served as a court appointed lawyer for several of Nat Turner's followers; however, not for Turner. However, Gray took it upon himself to obtain Nat Turner's confession. He transcribed and edited the document in this house. To ensure its accuracy, the confession was later read before six members of the county court. They signed a document certifying that Turner "acknowledged the same to be full, free and voluntary." Gray then copyrighted and published *THE CONFESSIONS OF NAT TURNER*.

GRAY'S MOTIVE?

Gray attested that his purpose was to create a clear and accurate record of the causes, events, and immediate aftermath of the insurrection; yet, the lawyer was in financial distress and may have published the document solely for monetary gain. Nevertheless, Gray's *THE CONFESSIONS OF NAT TURNER* provides one of the most important primary source documents detailing the 1831 Southampton Insurrection.

Images:

Frontispiece Confessions Turnetp.tif unc

Nat Turner portrait (UVA)1

Need to commission image of Gray and Nat interview

Sign #7 Rev 4/4/13

ROCHELLE-PRINCE HOUSE -- HOME OF JAMES ROCHELLE, COUNTY CLERK OF COURT

This home is one of the most significant properties on the National Register of Historic Places in Courtland. Built in 1814, it is known as the Rochelle-Prince House, and is an excellent example of a southeastern Virginia vernacular residence with Federal influences. The house was enlarged between 1826 and 1827 and is owned today by the Southampton County Historical Society.

James Rochelle & Family

Across the street from the Rochelle-Prince House is the Southampton County Courthouse where Nat Turner was brought for trial on November 1, 1831. As the county clerk, James Rochelle participated in the November 5th trial which resulted in Turner's execution. Rochelle's family connections to Captain James Henry Rochelle and Martha Rochelle Tyler add much to the importance of this residence.

Capt. Rochelle, a Naval Academy graduate, had a noteworthy career as an officer during the Mexican and Civil Wars. He was also a member of the Peruvian Commission of the Amazon. His niece, Martha, was President John Tyler's granddaughter. Fondly called "Miss Mattie," she served as postmistress of Jerusalem (now Courtland) for 14 years.

Images:

House from SH County History, pg 83 – JM Scan

Mattie Tyler (UVA)

Capt. James Henry Rochelle, pg 42 SH Co. Book - JM scan

Clerk's Office, Jerusalem, UVA

Sign #8 REV 4/4/13

MAHONE'S TAVERN -- IN 1831, VAUGHAN'S TAVERN

Crowds gathered here at Mahone's Tavern during the trials and executions of Nat Turner and many of his followers. Ideally located across the street from the Southampton County Courthouse, the tavern served as a hub of social and business activity during court sessions. Built in the late 1790s, it was known as Vaughan's Tavern in 1831.

Jerusalem, Virginia

Now known as Courtland, Jerusalem was the small county seat for Southampton County, situated on the north bank of the Nottoway River. Solon Borland wrote the governor of North Carolina that this hamlet was home to 175 people, with only three stores, one saddler, one carriage maker, two hotels, two attorneys, and two physicians living in the town.

Turner's trial and execution attracted much attention. Everyone was not able to witness the execution; however, many stayed here to be part of the final chapter of the 1831 Southampton Insurrection. It was said that when Nat Turner was hanged he "exhibited the utmost composure and calm resignation." By late November 1831, the insurrectionists' trials and executions were over and Jerusalem returned to its quiet role as the county seat. The tavern was acquired by Fielding Mahone in 1840.

A Tavern's Legacy

In 1831, this tavern was a refuge for the county's frightened white families as well as it served as headquarters for the assembled militias arriving to quell the rebellion. Owner Henry Vaughan, whose sister-in-law, Rebecca, was killed during the revolt, profited from the militia's use of his tavern. He was chastised by Richmond's *The Constitutional Whig* for overcharging the Commonwealth for the feeding and housing of Richmond militia units. *The Niles Register* of Baltimore decried that Vaughan was the "publican, who speculated on the bones of his kindred, which dragoons went to bury and avenge."

Images:

Niles Register cover and article

Map of county showing Jerusalem (LOC/VHS)

Nat's sword UVA

Sign #9 REV 4/5/13

THE COUNTY COURTHOUSE - SITE OF THE INSURRECTI0NISTS' TRIALS

Built in 1795, the Federal-styled Southampton County courthouse is where the trials of Nat Turner and many of his followers were held after the defeat of their insurrection in 1831.

Governor John Floyd

John Floyd, governor of Virginia in 1831, desired that the normal judicial process be followed when dealing with the captured insurrectionists. He wished to avoid widespread vigilante justice once the revolt had been suppressed. Consequently, a court of oyer and terminer, in which the county only had jurisdiction in capital cases over slaves, was convened.

The Rebels' Trials

After the rebellion, the captured purposed insurrectionists were arraigned for trial. The hearings were held from August 31 until November 21, 1831, during which time Nat Turner and his fellow conspirators were charged with making insurrection and murder. Of the 53 tried, 17 were executed, 12 had their sentences commuted by the Governor and were then transported into slavery in the Deep South, and 21 were discharged. Four "free persons of color" were arrested. Artist Arnold was dismissed; however, Thomas Haithcock, Berry Newsom, and Exum Artes were bound over for trial at the next session of the Superior Court since the court of oyer and terminer did not have jurisdiction in capital cases over persons other than slaves. Only Haithcock was convicted and executed.

A New Courthouse

By 1834, many of the justices in Southampton County found it "impractical for [the court} to hold its sessions" in the outdated courthouse and they requested a new one be built. It is often speculated that a major factor in this decision was the County's desire to wipe clean the painful memories of the 1831 Southampton Insurrection. The building you see today is a modified version of its replacement.

Images:

John Floyd – Lib of VA portrait

Courthouse (one of 2 from UVA)

Sign #10 Revised 4/5/13

THE COUNTY JAIL -- WHERE NAT TURNER WAS HELD

In 1831 a simple wood-framed structure stood here next to the Courthouse. Used as a jail by Southampton County, the small building held Nat Turner and many of his followers prior to trial, as well as between their sentencing and executions.

Nat Turner's Capture

Nat Turner was delivered to the jail on October 31, 1831, by his captor Benjamin Phipps. Edward Butts, deputy of Southampton County sheriff Clement Rochelle, signed the receipt as Governor John Floyd had authorized a $500 reward for Turner's capture.

Jail and Judgment

Nat was chained and shackled upon his arrival. An extra guard of militia men ensured that no plot occurred to allow the escape of the insurrection's leader. From November 1-4, 1831, lawyer Thomas Ruffin Gray sat with Nat, recording THE CONFESSIONS OF NAT TURNER. Turner was tried on November 5 by Southampton County's court of oyer and terminer. Justice of the Peace Jeremiah Cobb sentenced Nat to be "hanged by the neck until he be dead." Nat Turner remained in jail until judgment was carried out on November 11, 1831.

Images:

County Jail, SHHS_4a (UVA)

SH Co lock (Lib of VA)

Capture of Nat Turner drawing (UVA)

Butt's Receipt Lib of VA

If space: Floyd's Proclamation Lib of VA

Sign #11 REV 4-2-13

ANTHONY GARDINER -- NATIVE SON, PRESIDENT OF LIBERIA

Anthony William Gardiner (Gardner), one of the early leaders of Liberia, Africa, was born in Southampton County, Virginia, on February 3, 1820. He was 11 years old when he sailed with his family *to* Monrovia, Liberia, from Norfolk, Virginia, aboard the *Valador*, on February 12, 1831.

The American Colonization Society

Located on the West coast of Africa, Liberia was established by the American Colonization Society, a group founded in 1816 in Washington, D.C. Its mission was to promote the manumission of slaves and their return to Africa. Prominent politicians such as James Monroe and Henry Clay supported the Society, believing that repatriation was preferable to the emancipation of slaves. The Commonwealth of Virginia levied a tax on free blacks that helped underwrite the Society's transportation of these individuals to Liberia.

Gardiner's Success

Anthony Gardiner prospered politically in Liberia. He was a signer of the country's Declaration of Independence, and he helped draft that new nation's Constitution in 1846. He became Liberia's first attorney general in 1855, and was elected vice-president in 1872. When President J.J. Roberts became incapacitated, Gardiner became acting president in 1876. He was elected to Liberia's highest office in 1878, serving until 1883. Gardiner is acknowledged for enhancing educational opportunities, improving relations with native populations, and expanding foreign investment. He died in 1883.

Southampton County was also home to fellow African Americans Dred Scott, Nat Turner, and John Brown who played significant roles in the eventual abolition of slavery.

Images:

Anthony Gardiner - wiki

Map of Liberia - wiki

Seal of Liberia - YAY

Sign #12 REV 4/4/13

JOHN BROWN — A SLAVE NARRATIVE

In 1854, John Brown, a fugitive slave first known as "Fed," dictated his story to Louis Alexis Chamerovzow, secretary of The British and Foreign Anti-Slavery Society. The resulting book, *SLAVE LIFE IN GEORGIA: A NARRATIVE OF THE LIFE, SUFFERINGS, AND ESCAPE OF JOHN BROWN, A FUGITIVE SLAVE, NOW IN ENGLAND*, provided a dramatic account of the harsh life of a slave in the cotton-producing Deep South. His work is one of the few authentic fugitive slave narratives published prior to the Civil War, serving to increase awareness of the need to abolish slavery.

JERUSALEM TO LONDON

John Brown (Fed) was born about 1810 on the Betty Moore farm, three miles from Jerusalem in Southampton County, Virginia. At age ten, he was separated from his family and taken by a slave dealer to Georgia. He was sold for $350 to a rather cruel cotton planter, Thomas Stevens. After several failed attempts, Fed ran away. He allowed himself to be re-captured and sold to a planter in Louisiana where he became known as Benford. Escaping once more, he made his way to Indiana where he assumed his free name, John Brown. With the help of Quaker conductors on the Underground Railroad, Brown moved to Canada, working as a carpenter at the Dawn Institute. He later moved to England, settling in London where he worked as an herbalist until his death in 1876. Brown died a free man.

Cruel and Unusual Punishment:
"bells and horns on my head"

"Stevens fixed bells and horns on my head… I have seen many slaves wearing them. A circle of iron…is fastened round the neck. Another circle of iron fits quite close round the crown of the head. The two are held together in this position by three rods of iron, which are fixed in each circle. These rods, or horns, stick out three feet above the head, and have a bell attached to each. {They} do not weigh less than twelve to fourteen pounds. When Stevens had fixed this ornament on my head, he turned me loose, and told me I might run off now if I liked." -- *John Brown*

Images:

John Brown UNC

Frontispiece of book UNC

Bell and Horn – NYPL

Sign #13

Rev 3/13/13

DRED SCOTT – THE DECISION THAT POLARIZED AMERICA

Dred Scott was born a slave here in Southampton County around 1800. The Peter Blow family acquired him shortly thereafter. The Blows moved to Alabama and later to St. Louis, Missouri, where they sold Dred to John Emerson, a doctor serving in the U.S. Army.

Dred's Dream Deferred

When Dr. Emerson died in 1843, his wife, Irene, inherited Scott, his wife and children. Dred attempted to purchase his freedom, however, Mrs. Emerson refused. Scott then filed a legal suit, and in 1850 the St. Louis Circuit Court declared that Scott and his family should be granted freedom since they had been illegally held as slaves when Dr. Emerson had taken them on his Army assignments in the free jurisdictions of Illinois and Wisconsin. Mrs. Emerson appealed. The Missouri Supreme Court struck down the decision in 1852 and the Scotts were returned to slavery.

Landmark Case: Scott v. Sandford

With the assistance of new lawyers including Montgomery Blair, who was later a member of President Abraham Lincoln's cabinet, the Scotts filed suit in Federal court. The case went to the Supreme Court and on March 6, 1857, Chief Justice Roger B. Taney delivered the majority ruling that according to the Constitution, any person descended from Africans, whether slave or free, was not a citizen of the United States. He stated that neither the Northwest Ordinance nor the Missouri Compromise could exclude slavery. Finally, he ruled that Scott could not be freed by legislative action because he was subject to the Fifth Amendment which prohibited the taking of property from its owner "without due process."

Dred Scott was returned to the Blow family, and was later manumitted. Justice Taney's decision deepened tensions between the North and the South. The Civil War broke out four years later.

Images:

Roger Taney (LOC)

Dred Scott (LOC)

Frank Leslie's Illustrated (LOC)

Sign 14 Rev 4-5-13

SOUTHAMPTON COUNTY, 1830 -- A DIVERSE AGRARIAN COMMUNITY

Southampton County was established in 1749. Prior to the Europeans' arrival and after Jamestown, the area south of the Blackwater River was inhabited by Native Americans, primarily Nottoway and Meherrin Indians. According to the 1830 census, Southampton County mostly contained small farms with only a few large plantations such as "Sunnyside" and "Rosehill," also known as Indian Land. Landowners seldom owned more than 20 twenty slaves. Nevertheless, there were over 7,756 enslaved people of African descent in the county and 6,573 whites. The smaller white population often feared the consequences of a slave revolt.

Cash Crops

The county's primary products included tobacco, cotton, corn, brandy, and slaves. The rapid rise of cotton cultivation in the Deep South prompted the interstate trade, making slaves Virginia's largest export during the five decades prior to the Civil War.

Quakers, Baptists & the American Colonization Society

The 1830 census recorded the county had 1,745 free blacks. This population included Nottoway and Meherrin Indians who lived on reservations in the county, as well as any "free white of mixed blood, not being a white person, nor a free Negro."[1] This number is perhaps due to the influence of Quakers and the Emancipating Baptist sect, both crucial in the expansion of a community of "free people of color." Southampton resident David Barrow, a leading member of this Baptist sect, freed his slaves in 1784.

Free blacks had limited freedom and had to petition the Commonwealth to remain in Virginia after being granted liberty. Anthony Gardiner's family was one of many who were able to go to Liberia, Africa, via the American Colonization Society (ACS). Those who remained struggled. Four free blacks were accused of being followers of Nat Turner. One, Thomas Haithcock, would be executed for his role in the insurrection.

Southampton's free black population was repressed even more after the rebellion. A Quaker wrote the president of the ACS that those in the county were "so severely punished they had rather go anywhere than to stay here where they are persecuted for innocence." By December 1831, the ACS had transported one-sixth of the county's free black population to Liberia.

[1] *As stated in Free Person of Color Not Negro (FPCNN) certificates*

Images Keller Residence 4c UVA

School House 2c UVA

Hardie Musgrave UVA

Map of county LOC

Sign #15 REV 4/4/13

THE HANGING TREE -- WHERE NAT TURNER WAS EXECUTED

In front of where you are standing today once stood the Hanging Tree, Southampton County's place of execution. Nat Turner was hanged here on November 11, 1831. The executioner was Edward Butts, deputy of Southampton County Sheriff Clements Rochelle.

The Value of a Man

Butts wrote a certification that he had carried out the sentence of the court so that the estate of Putnam Moore, Turner's owner, killed during the insurrection, could be reimbursed Nat's value of $350. The Commonwealth of Virginia compensated the owners or their estates for the loss of their property – the slaves who were either executed or transported.

Virginia's New Slave Codes, 1832

The 1831 Southampton Insurrection was the last major slave revolt prior to the Civil War. Governor John Floyd called the Virginia General Assembly into session in January 1832, during which the causes, events, and results of Nat Turner's rebellion were discussed. Several bills concerning general manumission or the sale and deportation of all slaves were debated. None of these concepts proved to be successful.

Virginia's first slave code was passed in 1682. However, new slave codes were legislated in 1832 and were much more stringent and diligently enforced. They addressed prohibiting the movement, assembly, and education of slaves; restricting slave travel rights; outlawing slave possession of weapons; forbidding the sale of alcohol to slaves; prohibiting a slave from lifting a hand against a white person—even in self-defense; restricting slaves from holding religious meetings without the presence of a licensed white minister; and establishing harsher punishments for runaway slaves. Even the freedom of free blacks was limited by these codes.

Images:

The Hanging Tree UVA

Need Commission Nat and his Bible

Need to Purchase Smithsonian portrait Nat hanging

Sign #16 Rev 4-5-13

NAT TURNER'S GRAVE—PAUPER CEMETERY

Nat Turner was executed at high noon on November 11, 1831. Turner had sold his body to surgeons for dissection, reportedly so he could purchase ginger cakes before his death sentence was enacted. Turner was skinned to supply trophies such as purses. A surgeon in Norfolk received his skull and other gristly mementos such as one of his ears, taken as a keepsake. Whatever was left of Nat Turner's body was purportedly buried across the street in Courtland's Pauper Cemetery.

AFTER TURNER'S REVOLT

Nat Turner was executed due to his pursuit of violent means to end slavery. During the next 30 years, slave owners throughout the South lived in fear of another uprising. Jenny Camp Norfleet of Southampton County wrote that for a long time after the uprising, white people in Southampton County "…would tremble with fear at the barking of a dog, or the cracking of a twig." Rumors of slave revolts were everywhere following Turner's rebellion. Reports of "armies of slaves" seen on the highway near Wilmington, North Carolina, prompted the U.S. Army to send troops from Fort Monroe, Virginia, to New Bern, North Carolina, in 1831 and again to Beaufort, North Carolina, in 1833.

Two other noteworthy slave rebellions occurred after the 1831 Southampton Insurrection. The largest, a mass slave escape, occurred in I842 in Indian Territory, today's Oklahoma. Over 1,600 people of African descent were held in slavery by the Cherokee Nation. A mass escape began on November 15 and was suppressed by Cherokee militia on November 28. Two militiamen were killed and five runaways were executed.

John Brown's Revolt

The final major attempted uprising was abolitionist John Brown's attack on Harpers Ferry, Virginia (now West Virginia). Brown, with a force of 16 whites and five blacks, attacked the Harpers Ferry Arsenal on October 16, 1859. Brown hoped to use the weapons captured there to arm a general slave uprising surely to follow. On the morning of October 18, U.S. Marines under the command of Colonel R.E. Lee captured or killed most of Brown's command. Brown was convicted of treason against the Commonwealth of Virginia and was executed.

While African Americans would have to wait until the Civil War's conclusion to attain freedom, the Southampton Insurrection fostered the growth of the abolitionist movement in the North. It expanded the debate about slavery and eventually plunged the nation into war.

Images:

Grave yard site 15 UVA

Tree marking grave 10 UVA

jm- find john brown fort shot (If space allows)

You Are Here map

SLAVE REVOLTS

Rising Up For Freedom

NAT TURNER TRAIL
1831 Southampton Insurrection

The 1831 Southampton Insurrection is considered the bloodiest slave revolt in North American history. It was, however, preceded by many others. Slave owners lived in fear of such uprisings as enslaved African Americans often outnumbered white citizens in rural and urban areas throughout the South.

The Plant Cutter Revolt, 1663

This first known conspiracy took place in Gloucester County, Virginia. White indentured servants and black slaves planned a revolt; but, they were betrayed.

The Stono Rebellion, 1739

Armed slaves began marching to Florida to secure their freedom. More than 20 whites and 40 blacks were killed before the revolt was suppressed. It was the largest uprising in Colonial America.

New York Revolts, 1712 and 1741

On April 6, 1712, twenty-three enslaved Africans set fire to a building on Maiden Lane, now Broadway. When white colonists tried to put out the fire, they were attacked. Nine whites were killed; another six injured. More than 70 blacks were arrested. Twenty-seven were tried, and 21 were found guilty and executed.

During March and April 1741, a series of 13 fires erupted; one damaged Fort George. Two slaves were arrested. Before they were burned at the stake, they confessed to being part of a much larger plot. Eventually, 152 blacks and 20 whites were arrested, and many were deported. The ringleaders, the slave Casor and a white tavern keeper, were executed, their corpses left to rot in public.

Gabriel's Rebellion, 1800

Gabriel Prosser, a slave and literate blacksmith, planned an invasion of Richmond, Virginia. On August 30, 1800, severe weather delayed the insurrection. Subsequently, Prosser was betrayed and he and 35 of his co-conspirators were executed.

"It is important to acknowledge that history favorably regards Gabriel's cause while consigning legions who sought to keep him and others in chains to be forgotten."

–Virginia Governor Tim Kaine, August 30, 2007.
Kaine issued Gabriel an informal pardon.

Credit: ????

Gabriel Prosser, today recognized as a patriot and freedom fighter

It is noted that Prosser's inspiration was Toussaint L'Ouverture, the valiant leader of the successful overthrow of the French colonial regime in Saint-Domingue (Haiti), in 1791.

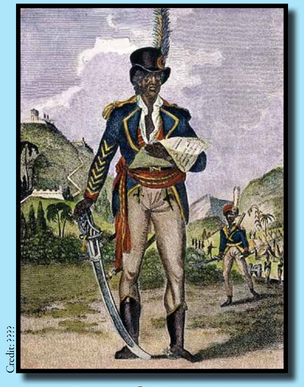

Credit: ????

General Toussaint L'Ouverture

Credit: ????

"Battle at San Domingo," ***1845, January Suchodolski***

More Notable Insurrections Prior to 1831

German Coast Rebellion, January 8-10, 1811 – This uprising near New Orleans, Louisiana, was suppressed by the U.S. Army. Two plantation owners and 82 slaves died.

George Boxley Rebellion, March 6,1815 –White abolitionist George Boxley of Fredericksburg, Virginia, strove to incite slaves to rebel. He was imprisoned; yet, he later escaped to Indiana where he was involved in the Underground Railroad.

Denmark Vesey Revolt, July 14, 1822 –Vesey, a free black, plotted to capture Charleston, South Carolina. He was supported by over 1,000 slaves and free blacks; but, his plan was revealed. Vesey and 35 others were executed.

You Are Here map

THE COUNTY JAIL

Where Nat Turner Was Held

NAT TURNER TRAIL
1831 Southampton Insurrection

In 1831 a simple wood-framed structure stood here. Used as a jail by Southampton County, the small building held Nat Turner and many of his followers prior to trial, as well as between sentencing and execution.

Nat Turner's Capture

Nat Turner was delivered to the jail on October 31, 1831, by his captor Benjamin Phipps. Edward Butts, deputy of Southampton County Sheriff Clement Rochelle, signed the receipt as Governor Floyd had authorized a $500 reward for Turner's capture.

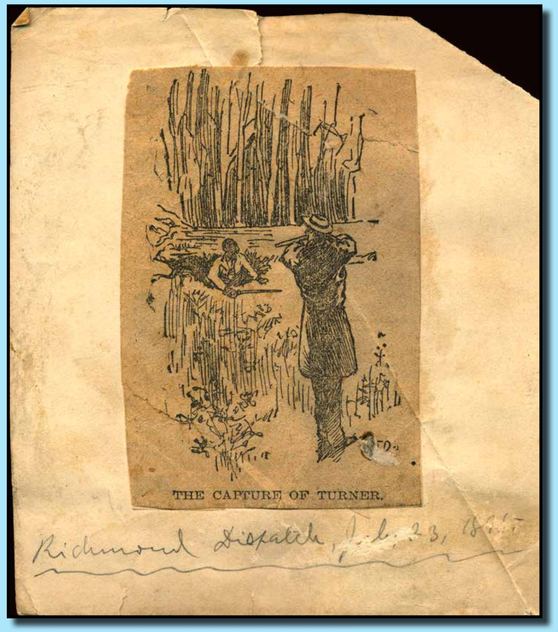

The Capture of Turner, illustration from July 23, 1835 Richmond Dispatch.

County Jail, Jerusalem, Va., Site of Nat Turner's Incarceration

Jail and Judgment

Nat was chained and shackled upon his arrival. An extra guard of militia men ensured that the insurrection's leader could not escape. From November 1-4, 1831, lawyer Thomas Ruffin Gray sat with Nat, recording THE CONFESSIONS OF NAT TURNER. Turner was tried on November 5 by Southampton County's court of Oyer and terminer. Justice of the Peace Jeremiah Cobb sentenced Nat to be "hanged by the neck until he be dead, dead, dead." Nat Turner remained in jail until judgment was carried out on November 11, 1831.

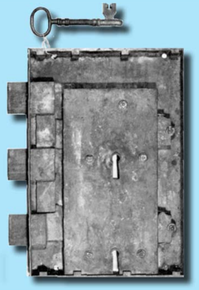

The actual lock and key from Turner's jail cell, one of many artifacts in the Southampton County Historical Society's collection.

About Cross Keys

Cross Keys, a small crossroads community, had a jail and post office. Here, militia units imprisoned several of Turner's insurrectionists before transporting them to Jerusalem for trial.

Cross Keys (showing old store house where some of insurgents were imprisoned)

Lock and key image courtesy of the Southampton Historical Society. All others speech and photographs relating to Nat Turner's Insurrection, c. 1900-1941. Accession #10673, Special Collections, University of Virginia Library, Charlottesville, Va.

HALL HOUSE
Legacy of the Past

Dec. 1, 2012

Specs for fabrication/installation of 17 Southampton 1831 Insurrection Trail interpretive markers

Fabricator/Installer – Circle C Subcontractor:

Nature Graphics

Lea J. Beazley, Owner

naturegraphics@bellsouth.net
704-892-6967
naturegraphicsdisplays.com
295 Lakeshore Drive
Mooresville, NC 28117

Graphic design of (17) 36"w x 24"h panels

Fabrication of (17) 36"w x 24"h panel (2 mil vinyl, mounted to back of 1/8" non-glare acrylic with optically clear adhesive, back covered with 4 mil block-out vinyl).

Fabrication of (17) frame-in-frame low-profile pedestal for 36"w x 24"h panel

Installation of (17) frame-in-frame low-profile pedestals with panel

Price **includes** shipping as long as I do the installation. Otherwise, a shipping charge would be added. Price **does not include** the cost of proofs (which, in my opinion, are not needed as I will provide pdf files of the panels for your approval at no charge).

Please see drawings and powder coating documents attached.

Julianne Murphy
Pres. Circle C Communications
113 Scotts Point
Hampton, VA 23663
Tel 757-224-5532
julie.circlec@cox.net
Dec. 1, 2012

FRAME IN FRAME BASE -- Drawing #1

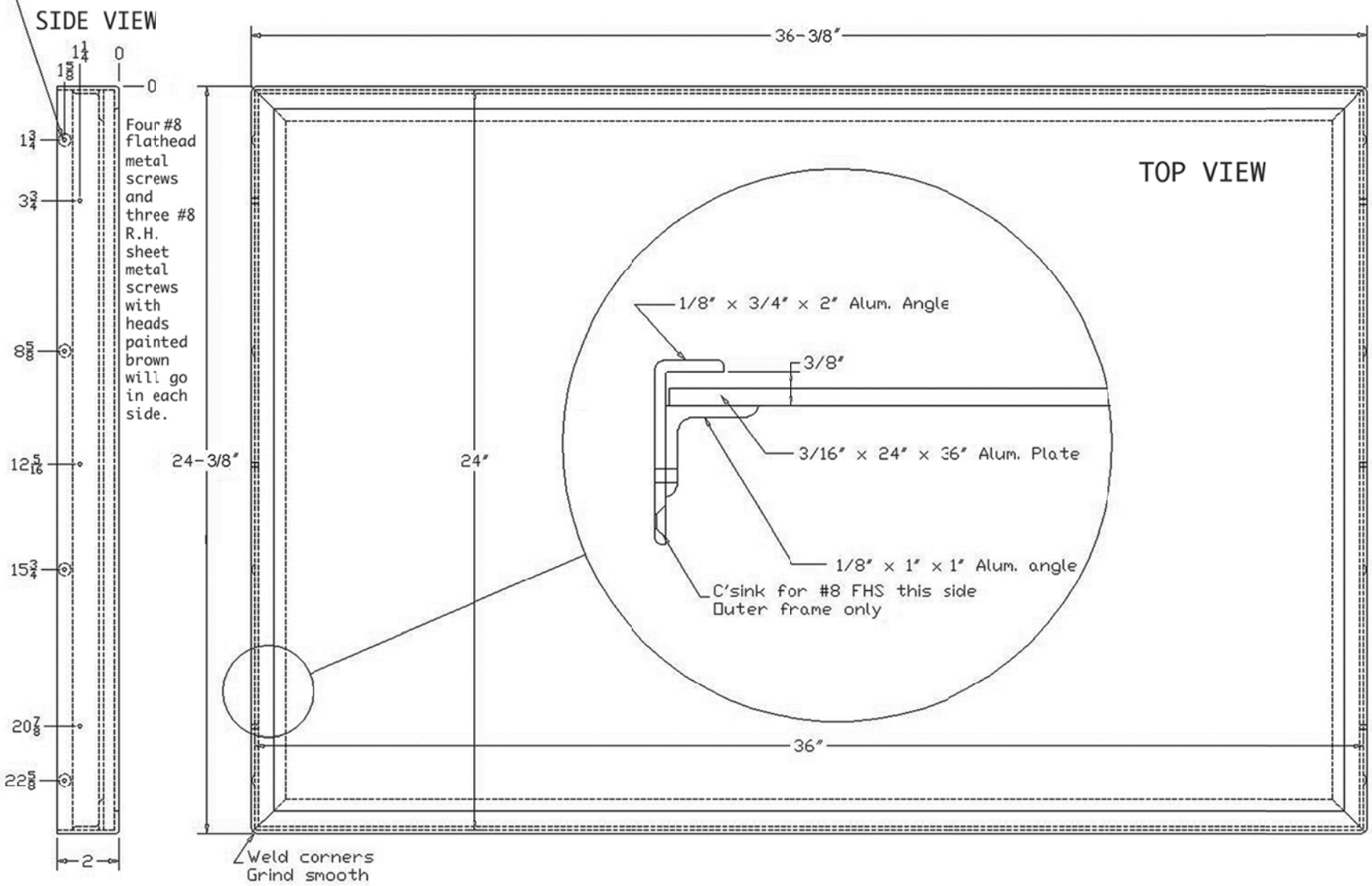

FRAME IN FRAME BASE

Drawing #2

Pedestal, Upright Assy.
Left Hand shown, Right Hand Opposite
(Break all sharp Edges)

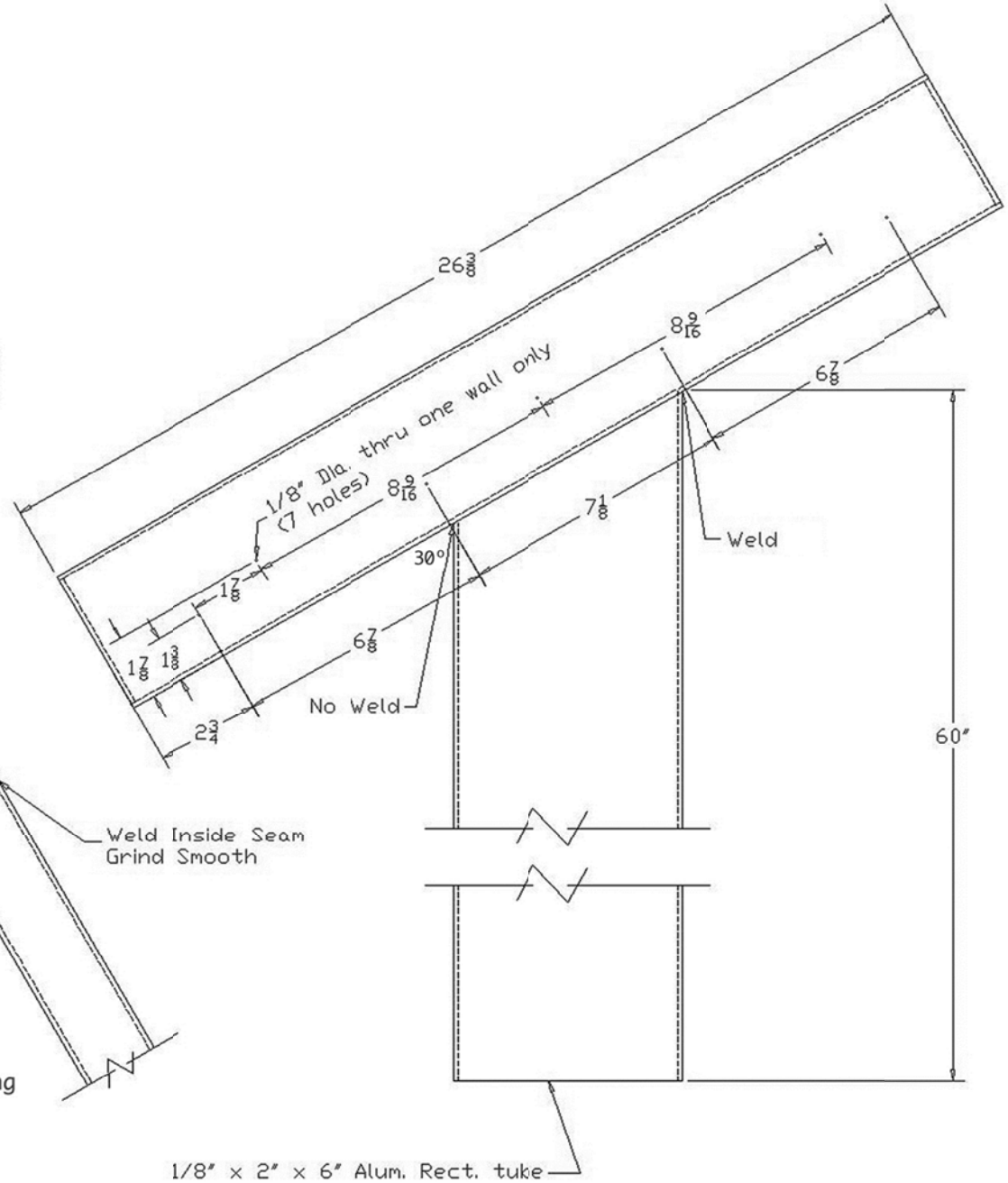

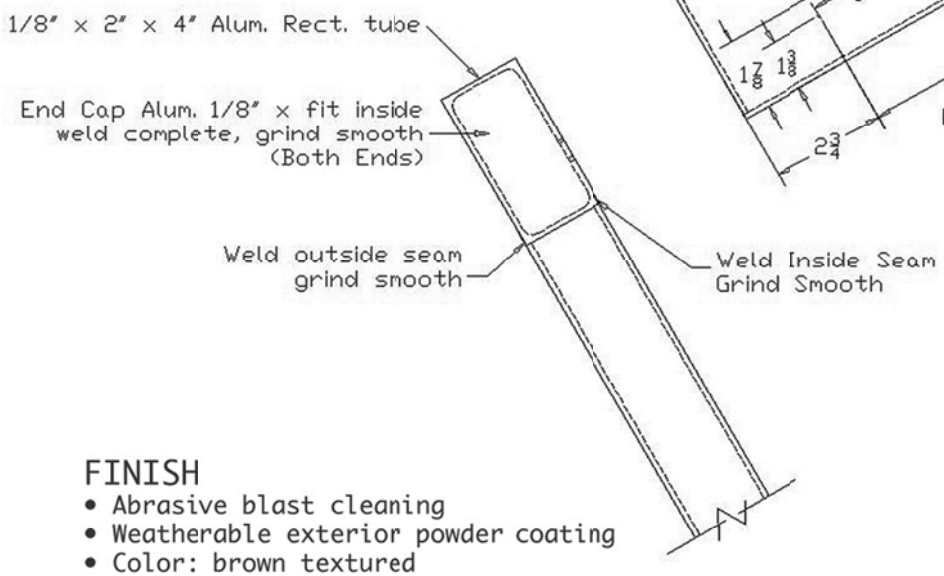

FINISH

- Abrasive blast cleaning
- Weatherable exterior powder coating
- Color: brown textured

The pedestals shall be finished with a process called powder coating, a type of coating that is applied as a free-flowing, dry powder. The main difference between a conventional liquid paint and a powdercoating is that the powder coating does not require a solvent to keep the binder and filler parts in a liquid suspension form. The coating is typically applied electrostatically and is then cured under heat to allow it to flow and form a "skin." Powder coating will be used because it creates a hard finish that is tougher than conventional paint, because it emits zero or near zero volatile organic compounds (VOCs), and because powder coating overspray can be recycled (thus reducing waste).

The type of powder coating that shall be utilized in finishing the bases is thermosetting (not thermoplastic). Thermosetting incorporates a cross-linker into the formulation. When the powder is baked, it reacts with other chemical groups in the powder polymer and increases the molecular weight and improves the performance properties.

The steps that shall be required in powder coating the bases include:

1. Part preparation and pretreatment – The removal of oil, soil, lubrication greases, metal oxides, welding scales, etc. is essential prior to the powder coating process. This shall be achieved by treating each base with an abrasive blast process.

2. Powder application – The powder coating shall be applied to the bases by using the electrostatic spray process. The powder material shall be an exterior, durable powder. The color and type shall be brown textured (or black textured if the customer prefers).

3. Curing – The bases shall be cured per the powder manufacturer’s recommendations in order to reach full cure and establish the full film properties for which the material was designed.